GENERAL NOTES

HILLSIDE ENGINEERING SERVICES LTD. (HES) SUBMITS THIS DRAWING ON THE BASIS THAT WORKS DESCRIBED ON IT WILL BE CARRIED OUT BY PERSONS COMPETENT AND EXPERIENCED IN THE SKILLS REQUIRED TO EXECUTE THEM. UNLESS NOTED OTHERWISE, HES HAS NOT BEEN ENGAGED TO ORGANIZE OR MANAGE THE WORKS OR ANY ASPECT OF PERMITS OR AUTHORIZATIONS. HES WILL NOT ACCEPT RESPONSIBILITY FOR THE WORK METHODS OR TECHNIQUES EMPLOYED IN THE EXECUTION OF THE WORKS ON THE DRAWING. THE CLIENT, WORKS MANAGER, OR CONTRACTOR IS RESPONSIBLE FOR INFORMING HES OF ANY QUERY OR CONCERN REGARDING UNUSUAL OR UNANTICIPATED CONDITIONS ENCOUNTERED DURING EXECUTION OF THE WORKS OR PREPARATION FOR THEM. THE WORK SHALL BE CONSTRUCTED IN ACCORDANCE WITH THE SEALED DRAWING, DEPARTURES FROM THE DRAWING WILL ONLY BE ALLOWED IF FULLY DISCLOSED AND DISCUSSED WITH HES AND APPROVED IN WRITING. THE CLIENT, WORKS MANAGER OR CONTRACTOR IS RESPONSIBLE FOR INFORMING HES OF THEIR INTENTION TO PROCEED AND PROVIDING A PROGRAM TO EXECUTE THE WORKS DESCRIBED IN THE DRAWING. THIS MUST INCLUDE CONFIRMATION THAT A BUILDING PERMIT HAS BEEN ISSUED TOGETHER WITH ANY CONDITIONS ATTACHED TO IT, THE DATE WORK WILL START, ANTICIPATED PRINCIPLE ACTIVITY DATES: IE. EXPOSURE OF FOOTING BEARING SURFACE, FORMWORK ERECTION, STEEL REINFORCEMENT PLACING, CONCRETE PLACING, ETC. THIS DOES NOT RELIEVE THE CLIENT, WORKS MANAGER, OR CONTRACTOR OF THE RESPONSIBILITY TO INFORM HES WHEN PRINCIPLE ACTIVITIES ACTUALLY OCCUR WITH 24 HOURS NOTICE FOR INSPECTION OF SAID WORKS. ALL WORKS INCLUDING TEMPORARY WORKS MUST BE EXECUTED IN A SAFE MANNER APPLYING THE RECOMMENDATIONS DESCRIBED IN THE CURRENT EDITION OF INDUSTRIAL HEALTH AND SAFETY REGULATIONS ISSUED BY THE WORKSAFE BC AS A MINIMUM STANDARD. THE WORKS DESCRIBED IN THIS DRAWING HAVE BEEN PREPARED FOR THE SPECIFIC SITE, DESIGN OBJECTIVE AND PURPOSE DESCRIBED TO HES BY THE CLIENT. THE APPLICABILITY AND RELIABILITY OF THE WORKS DESCRIBED IN THIS DRAWING ARE ONLY VALID TO THE EXTENT THAT THERE HAS BEEN NO MATERIAL ALTERATION OR VARIATION FROM ANY OF THE SAID DESCRIPTIONS PROVIDED TO HES UNLESS HES WAS SPECIFICALLY REQUESTED BY THE CLIENT TO REVISE THE DRAWING IN THE LIGHT OF SUCH VARIATION OR ALTERATION AND HES AGREED TO AND ACTUALLY REVISED THE DRAWINGS.

INSPECTION POLICY

HES WILL INSPECT THE WORKS AS REQUIRED AND MAY REJECT ANY WORKS FOUND UNACCEPTABLE DUE TO POOR WORKMANSHIP, DEVIATION FROM THE DRAWING, DEFECTIVE MATERIAL, OR DAMAGE SUSTAINED FOR ANY REASON AND AS A RESULT OF ANY OF THE ABOVE OR ANY OTHER REASON, CONSIDER THE WORKS TO BE DEFECTIVE. HES RESERVES THE RIGHT TO WITHDRAW ITS SERVICES AT ANY TIME BY GIVING NOTICE ON SITE AND INFORMING THE PROPER AUTHORITIES OF ACTIONS OR REASONS.

DESIGN

THIS FOUNDATION HAS BEEN DESIGNED FOR FORCES IN ACCORDANCE WITH THE PROVISIONS SET FORTH IN THE BC BUILDING CODE 2018:

DEAD LOADS		LIVE LOADS	
	ROOF ..... = KPa (15psf)	GROUND SNOW = KPa (46psf)	
WIND LOADS	FLOOR ..... = KPa (15psf)	ROOF SNOW .... = KPa (psf)	
1/50 = 0.52KPa (psf)	PARTITION ..... = KPa (psf)	RAIN ..... = KPa (0.1psf)	
	SOLAR PANELS = 0.24KPa (5psf)	FLOORS ..... = KPa (40psf)	
		CORRIDORS ..... = KPa (psf)	

MANUFACTURERS OF ALL STRUCTURAL COMPONENTS SHALL SUBMIT SHOP DRAWINGS STAMPED BY A PROFESSIONAL ENGINEER REGISTERED IN BC FOR REVIEW.

WOOD FRAMING

ALL DIMENSIONAL LUMBER SPF#2 OR BETTER, SUBFLOORING 5/8" D.FIR PLYWOOD OR O.S.B. BOARD, UNLESS NOTED, ROOF SHEATHING TO BE 7/16" D.FIR PLYWOOD, ROOF SHEATHING TO BE 90 DEGREES TO FRAMING WITH 1 1/2" (1/16") SPACING AT BUTT ENDS. CROSS BRACING AS PER JOIST MANUFACTURERS SPECS. ALL LINTELS 2-2x10 SPF#2 UNLESS NOTED.

SITE WORK

FOUNDATIONS SHALL NOT BE POURED BEFORE BEARING MATERIAL HAS BEEN APPROVED BY A GEOTECHNICAL ENGINEER, CONTRACTOR TO NOTIFY GEO. ENGINEER 24 HOURS PRIOR TO POUR. BASE OF FOUNDATION SHALL BE PROTECTED FROM SNOW, RAIN, FROST AND WATER INFILTRATION.

CONCRETE

ALL CONCRETE WORK SHALL COMPLY WITH THE REQUIREMENTS OF THE CSA STANDARD CAN3-A23.3-M84. CONCRETE STRENGTHS TO BE VERIFIED BY INDEPENDENT TESTS TO CSA CAN3-A23.3-M84 AT THE EXPENSE OF THE CONTRACTOR. A MINIMUM OF WA TEST CYLINDERS SHALL BE CAST FOR EACH 100 CUBIC METERS OR EACH DAYS POUR, WHICHEVER IS LESS WITH CERTIFIED SUBMITTED TO THE ENGINEER. ALL CONCRETE SHALL HAVE COMPRESSIVE STRENGTH OF: SLABS ON GRADE - INT. =32MPa FOUNDATION WALLS=25MPa

SLABS ON GRADE - EXT.	=32MPa	COLUMNS	=25MPa
FOOTINGS	=25MPa	SUSPENDED SLAB	=25MPa
GRADE BEAMS	=25MPa	PRECAST	=25MPa

CEMENT SHALL BE TYPE 10 TO CAN/CSA-A23.1-M89, ALL COLD AND HOT WEATHER CONCRETE WORK SHALL CONFORM TO CAN/CSA-A23.1-M90. REINFORCING BARS SHALL BE STEEL BARS CONFORMING TO CSA G30.12M1977 GRADE 400. WELDED WIRE MESH SHALL CONFORM TO CSA G30.5-M1983. LAPS SHALL INCLUDE TWO CROSS WIRE PLUS 2" LAP SPLICE OF REBAR SHALL BE THE FOLLOWING OR GREATER:(WITH STAGGERED SPLICES): WIRE MESH =300mm (1/2") 15mm=600 mm (24")
10 mm =600 mm (24") 20mm=750 mm (30")

WELDING OF REBAR IS NOT PERMITTED.

FORMWORK

ALL FORMWORK FOR FOOTINGS ARE TO BE FULL DEPTH OF FOOTINGS, ie 2" x 8" TO BE USED FOR 8" DEEP FOOTINGS. ALL FOOTINGS AND FOUNDATION WALL FORMS ARE TO BE PROPERLY BRACED AND SUPPORTED TO PREVENT FORMS FROM BREAKING OUT AND MEET WORKSAFE BC STANDARDS.

EXCAVATION

ALL EXCAVATIONS ARE TO MEET WORKSAFE BC SAFETY REQUIREMENTS.

BACKFILL

BACKFILL ONLY AFTER CONCRETE IS FULLY CURED (4 WEEKS) BACKFILL AND COMPACT IN MAX. OF 6" LIFTS TO 95% STD. DENSITY OR AS NOTED.

FOOTINGS

ARE TO BE PLACED ON UNDISTURBED OR COMPACTED SOIL WITH AN ALLOWABLE BEARING PRESSURE OF 2000 LBS/SQ. FT. OR GREATER

REBAR COVER

CAST AGAINST SOIL	=75mm (3")	EXPOSED TO SOIL OR WEATHER:
WALLS AND SUSPENDED SLABS	=25mm (1")	20mm AND LARGER =50mm (2")
BEAMS	=25 mm (1")	15mm AND SMALLER=37mm (1 1/2")

ALL REINFORCING REBAR IS TO BE PLACED SYMMETRICALLY IN SPANS AND OVER SUPPORTS. DOWELS AND ANCHOR BOLTS ARE TO BE PLACED BEFORE CONCRETE POUR. TEMPLATES ARE TO BE USED. ALL STEEL IS TO BE PROPERLY PLACED AND TIED BEFORE ANY CONCRETE IS POURED. THE ENGINEER IS TO BE NOTIFIED A MINIMUM OF 24 HOURS BEFORE POURING ANY CONCRETE, TO INSPECT THE STEEL PLACEMENT.

STRUCTURAL STEEL

STRUCTURAL DESIGN, DETAILING, FABRICATION AND ERECTION OF ALL STEEL AND CONNECTIONS SHALL BE IN ACCORDANCE WITH CAN3-S16.1-M89. WELDING SHALL CONFORM TO CSA W59-M1984 AND SHALL BE PERFORMED BY A CSA CERTIFIED WELDER. FABRICATION SHOP SHALL BE APPROVED BY THE CANADIAN WELDING BUREAU TO CSA W47.1-1983 OR EQUIVALENT. THE ENGINEER MUST BE SUPPLIED WITH CERTIFICATES ON REQUEST. STEEL GRADES: H.S.S. =350W CLASS C ANCHOR BOLTS =A57M A307
BOLTS, NUTS, WASHERS=A91M A325 OTHER STEEL =300W

STEEL CONNECTIONS SHALL BE DESIGNED BY THE FABRICATOR. ALL FILLET WELDS MIN. 6mm (1/4"). BOLTS MIN. M20. MINIMUM OF 2 BOLTS PER CONNECTION.

SPLICES

LAP SPLICES TENSION 30 TIMES, BINDING 24 TIMES CSA G30-12 LAP SPLICES OF BARS IN TENSION AND BENDING TO BE AS SHOWN OR TO BE OFFSET.

SUPPORTS

KEEP SUPPORT TO BEAMS AND SUSPENDED SLABS IN PLACE UNTIL CONCRETE IS FULLY CURED (4 WEEKS). FOUNDATIONS ARE TO BE LATERALLY SUPPORTED TOP AND BOTTOM BEFORE BACKFILLING.

MASONRY

WORKMANSHIP SHALL CONFORM TO CSA S304.1-94 ALL BOND BEAMS SHALL BE KNOCKOUT TYPE. SPLICES IN REINFORCING: WIRE REINFORCING=300mm (12") 15mm=600mm (24")
10mm =450mm (18") 20mm=760mm (30")

REINFORCED WALLS SHALL BE (UNLESS NOTED OTHERWISE):
HORIZONTAL: 1-20mm AT 2435mm (8'-0") IN BOND BEAMS
3.8mm LADDER WIRE TYPE JOINT REINFORCING EVERY 3RD COURSE
VERTICAL: 1-15mm AT 1220mm(4'-0") CENTERED IN CORE
ADDITIONAL: 1-20mm AT UNSUPPORTED ENDS OF WALL
1-20mm VERTICAL EACH SIDE OF OPENING
1-20mm VERTICAL IN EACH CELL OF PIERS AND PILASTERS
1-15mm OVER OPENINGS 600mm (24")

FOUNDATION WALLS SHALL HAVE 15mm DOWELS TO MATCH ALL VERTICAL REINFORCING, MINIMUM 600mm(24") OVERLAP CELLS THAT ARE TO BE REINFORCED SHOULD BE KEPT CLEAR OF MORTAR. FILL CELLS CONTAINING ANCHOR BOLTS OR REINFORCING REBAR WITH 20MPa CONCRETE, 10mm (3/8") AGGREGATE, 200mm (9") SLUMP. CONCRETE SHALL BE VIBRATED. TYPE "S" MORTAR ONLY. COLD WEATHER WORK TO CONFORM TO CAN-A37-M84. TYPICAL MASONRY LINTEL: CLEAR SPAN OF OPENING DEPTH OF LINTEL REINFORCEMENT:

LESS THAN 3'-0"	=> 400mm (16")	2-15mi
3'-0"	=> 600mm (24")	2-20mi
8'-10"	=> 800mm (31")	2-25mi
ALL LINTELS TO BE	= 600mm (24") PAST ENDS	

DISCLAIMER

CONTRACTORS AND SUB-CONTRACTORS ARE RESPONSIBLE FOR CHECKING DETAILS, DIMENSIONS AND DISCREPANCIES. IF THERE ARE ANY DISCREPANCIES THEY MUST BE REPORTED TO THE DRAFTSMAN BEFORE CONSTRUCTION. HES IS NOT RESPONSIBLE FOR ANY CHANGES TO THE DRAWINGS ADVISED BY ANY APPROVING AUTHORITY, OFFICIAL OR OTHER PROFESSIONAL CONSULTANT AT ANY TIME PRIOR OR DURING CONSTRUCTION WITHOUT WRITTEN CONFIRMATION. HES IS NOT RESPONSIBLE FOR PROBLEMS WITH SITE AND SOIL CONDITIONS UNLESS THEY ARE CONTRACTED FOR THIS PURPOSE. OWNER AND/OR CONTRACTOR ARE RESPONSIBLE FOR NOTIFYING THE ENGINEER OF ALL SITE RELATED INFORMATION THAT THEY ARE AWARE OF. MATERIAL, CONSTRUCTION, EQUIPMENT AND ITS INSTALLATION SHALL COMPLY TO THE BC BUILDING CODE. IT IS THE CONTRACTORS RESPONSIBILITY TO BE FAMILIAR AND COMPLY TO THE CODE. RESALE OF THESE DRAWINGS IS STRICTLY PROHIBITED.

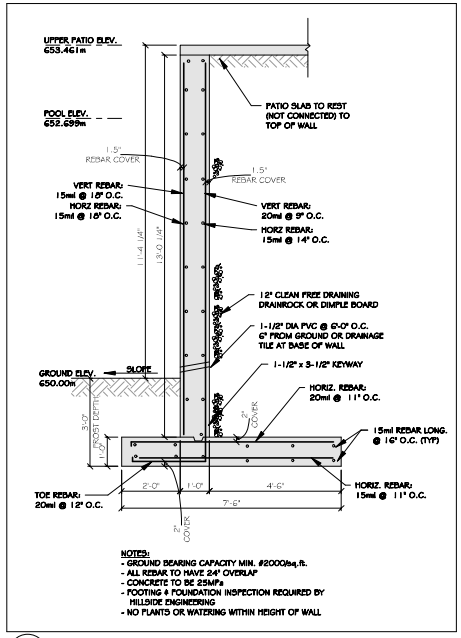

NOTES:
- GROUND BEARING CAPACITY MIN. #2000/sq.ft.
- ALL REBAR TO HAVE 24" OVERLAP
- CONCRETE TO BE 25MPa
- FOOTING & FOUNDATION INSPECTION REQUIRED BY HILLSIDE ENGINEERING
- NO PLANTS OR WATERING WITHIN HEIGHT OF WALL

2 S.1 11'-4" Patio Retaining Walls
1/2" = 1'-0"

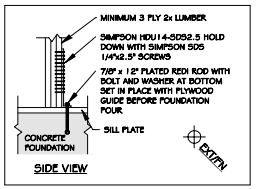

4 S.1 Holddown (EXT/FN) - Typical
3/4" = 1'-0"

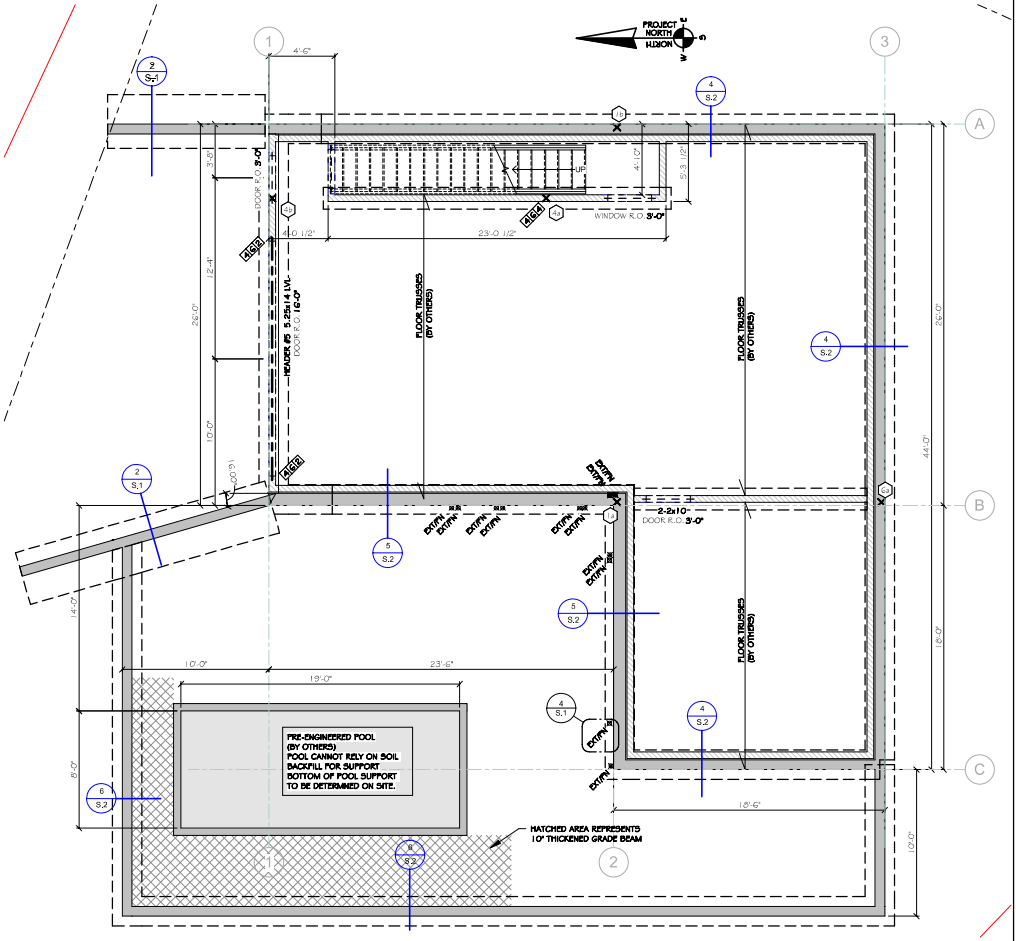

LEGEND

SW2x6-1 (SHEARWALL)
- 2x6 STUDS @ 16" O.C.
- 3/4" PLYWOOD ATTACHED TO ONE SIDE WITH 3" NAILS @ 4" O.C.

SW2x6-2 (SHEARWALL)
- 2x6 STUDS @ 16" O.C.
- 3/4" PLYWOOD ATTACHED TO ONE SIDE WITH 3" NAILS @ 4" O.C.

- BLOCKING AT PLYWOOD JOINTS
- NO HOLES TO BE PLACED IN WALLS WITHOUT PERMISSION FROM HES

NOTE: ALL FOOTINGS ON COMPACTED OR ORIGINAL GROUND AS PER GEOTECH

THESE DRAWINGS WERE CREATED BASED ON THE LATEST ARCHITECTS / DRAFTSMANS DRAWINGS. THESE DRAWINGS TO BE USED IN CONJUNCTION WITH THE ARCHITECTS DRAWINGS.

ADDITIONAL NOTES:
- FOUNDATION PLAN DRAWINGS HAVE BEEN PRODUCED BASED ON TRUSS AND JOIST LAYOUTS SUPPLIED TO HES BY THE OWNER/CONTRACTOR.
- IN ORDER TO VERIFY WORK AS SPECIFIED ON THIS DRAWING OR DRAWINGS, HILLSIDE ENGINEERING MUST INSPECT WORK.
- ALL DIMENSIONS ARE TO THE OUTSIDE FACE OF STUDS AND TO THE CENTER OF COLUMNS UNLESS SPECIFIED
- IF ANY TJI JOISTS ARE SHOWN, SIZE OF JOISTS ARE TO BE CONFIRMED WITH JOIST SUPPLIER.
- IF ANY GLULAM OR PARALLAM BEAMS ARE SHOWN, SIZE OF BEAMS ARE TO BE CONFIRMED WITH BEAM SUPPLIER.
- ALL DECK AND ROOF JOISTS AND ROOF TRUSSES WITH MORE THEN 24" OVERHANGS TO HAVE HURRICANE HANGERS ATTACHED TO BEAMS AND LEDGERS
- ALL BEAMS TO BE ATTACHED TO POSTS WITH A METAL STRAP
- ALL POSTS TO BE ATTACHED TO FOUNDATION WITH A METAL SADDLE.
- IF ANY CONCRETE FOOTING OR FOUNDATION WALL IS POURED AGAINST AN EXISTING CONCRETE FOOTING OR FOUNDATION, ALL REBAR MUST BE DOWELLED A MINIMUM 5" AND EPOXY GROUTED, UNLESS OTHERWISE NOTED.
- NO CONCRETE ON WOOD FLOORS, CONCRETE TILES ON ROOFS OR HOT TUBS UNLESS SPECIFIED
- "BY OTHERS" REFERS TO: ANYONE ELSE OTHER THAN HILLSIDE ENGINEERING OR ITS EMPLOYEES.
- HILLSIDE ENGINEERING ASSUMES NO LIABILITY OR RESPONSIBILITY FOR STRUCTURAL INTEGRITY, QUALITY OF MATERIAL OR WORKMANSHIP OF ITEMS ON THIS DRAWING LABELLED "BY OTHERS".
- HILLSIDE ENGINEERING ASSUMES NO LIABILITY OR RESPONSIBILITY FOR STRUCTURAL INTEGRITY, QUALITY OF MATERIAL OR WORKMANSHIP OF ITEMS ON THIS DRAWING WHICH HILLSIDE ENGINEERING HAS NOT TAKEN RESPONSIBILITY FOR ON THE BC BUILDING CODES B-SCHEDULE.

CONTRACTOR TO LATERALLY BRACE TOP AND BOTTOM OF FOUNDATION WALLS BEFORE BACKFILLING AND COMPACTING SOIL.

UNLESS SPECIFIED
- ALL INTERIOR BEARING WALLS 2x6 @ 16" O.C. WITH BLOCKING @ MID HEIGHT
- ALL HEADERS 2-2x10
- ALL GLULAMS D.FIR. 24f-EX
- ALL LVLs 2.0E
- ALL LSLs 1.55E
- ALL POSTS 3 - 2x6 UNDER BEAMS AND GIRDERS
- ALL WINDOW OR DOOR HEADER SUPPORTS 3-2x6 WITH 3" BEARING
- ALL POSTS CONTINUOUS UNBROKEN

STANDARD INSPECTION REQUIREMENTS
- IF HILLSIDE ENGINEERING SERVICES LTD. (HES) IS RESPONSIBLE FOR SOILS UNDER THE FOUNDATION THE GROUND MUST BE INSPECTED AND TESTED IF REQUIRED PRIOR TO FOOTING FORMS BEING PLACED.
- HES MUST WITNESS ALL REBAR TIED IN PLACE PRIOR TO ANY CONCRETE BEING POURED.
- HES MUST INSPECT ALL THE STRUCTURAL COMPONENTS, THAT HES IS RESPONSIBLE FOR AS PER SCHEDULE-B ISSUED, AFTER THE TRADES (ie. ELECTRICAL, PLUMBING, CENTRAL VAC., SECURITY SYSTEMS, ETC.) ARE COMPLETED AND BEFORE ANY OF THE STRUCTURAL COMPONENTS ARE COVERED UP WITH INSULATION, STUCCO, ETC.
- THE NUMBER OF INSPECTIONS REQUIRED WILL BE DETERMINED BY THE COMPLEXITY OF THE PROJECT.
- IT IS THE CONTRACTORS RESPONSIBILITY TO CALL FOR INSPECTIONS PRIOR TO ANY OF THE COMPONENTS BEING COVERED UP.
- HES REQUIRES A MINIMUM OF 24 HRS NOTICE AND AT TIMES 48 HRS MAY BE REQUIRED.

POST LEGEND

4 G S	4 = # OF STUDS G = 2x6 STUD (SPF#2) S = # OF CRIPPLES
5 5 L	5.25"x5.5" LVL 2.0E
5 7 L	5.25"x7.25" LVL 2.0E
6 G F	6"x6" D.FIR#2 OR BETTER
8 D F	8"x8" D.FIR#2 OR BETTER
2a	LOAD POINT NUMBER

LEGEND

SECTION #
SHEET #

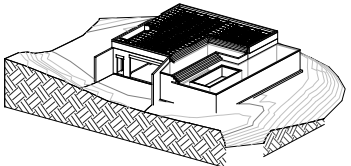

3 Isometric View 1

THIS DRAWING REPRESENTS HES' BEST JUDGEMENT IN LIGHT OF THE INFORMATION AVAILABLE AT THE TIME OF PREPARING THE DRAWINGS. THE INFORMATION WAS VISUAL ONLY. HES DID NOT REMOVE OR CUT AWAY ANY PANELING, WOOD STUDS OR CONCRETE. HES RESERVES THE RIGHT TO MODIFY THE DRAWS IF NEW INFORMATION IS DISCOVERED DURING THE CONSTRUCTION PROCESS WHEN ITEMS ARE EXPOSED FOR INSPECTION.

DRAWING SHEET LIST

S.1 Foundation Plan
S.2 Main Floor, Roof & Details

REVISIONS	ISSUE	DATE	BY	DESCRIPTION
	1	Sept 28/21	DMC	Issued for Permit
	2	April 25/22	DMC	Wall & Window Changes

HILLSIDE ENGINEERING SERVICES LTD.
LAND PLANNING - ENGINEERING
PERMITTING - STRUCTURAL - CIVIL - CADD - DESIGN
COMMERCIAL - INDUSTRIAL - RESIDENTIAL
54 NANAIMO AVENUE EAST, PENTICTON, BC. V2A 1L9
PP#1002328 PHONE (250) 490-4155

162 Saliken Drive, Penticton, B.C.

Foundation Plan

SCALE: As Indicated	JOB #: 6409
DRAWN BY: DMC	CREATED:Sept 16/21
	SHEET #: S.1
Approver	